The Multi-pass Filter Performance Test

Internationally recognized as the most reliable means to obtain consistent and repeatable information on a filter's ability to control specific size particles.

The multi-pass "beta" (ß) test uses real dirt (ACFTD) challenging the filter in the same way an operating system would.

Fresh contaminant is introduced in a slurry form into the test reservoir, mixed with the fluid in the reservoir, and pumped through the test filter. Contaminant not captured by the filter is returned to the reservoir for another pass through the filter – thus the name "multi-pass". Upstream and downstream fluid samples are analyzed to determine their respective particle counts.

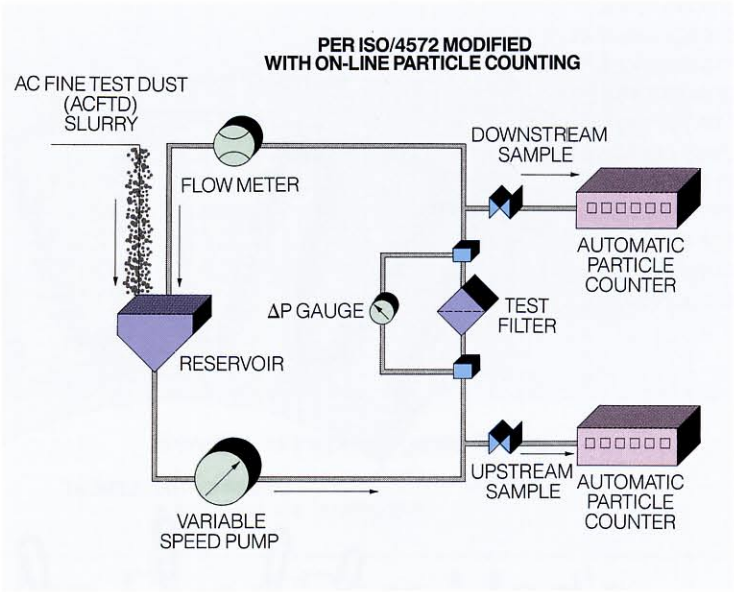

Beta (ß) Ratio

Beta ratio

The separation capability of a filter is presented as a filtration ratio beta sub x ($ß_x$), defined as "the ratio of the number of particles greater than a given size (x µm) in a given volume of influent fluid to the number of particles greater than the same size (x µm) in the same volume of effluent fluid."

$$\text{Filtration ratio } ß_x = \frac{\text{Number of upstream particles x µm and larger}}{\text{Number of downstream particles x µm and larger}}$$

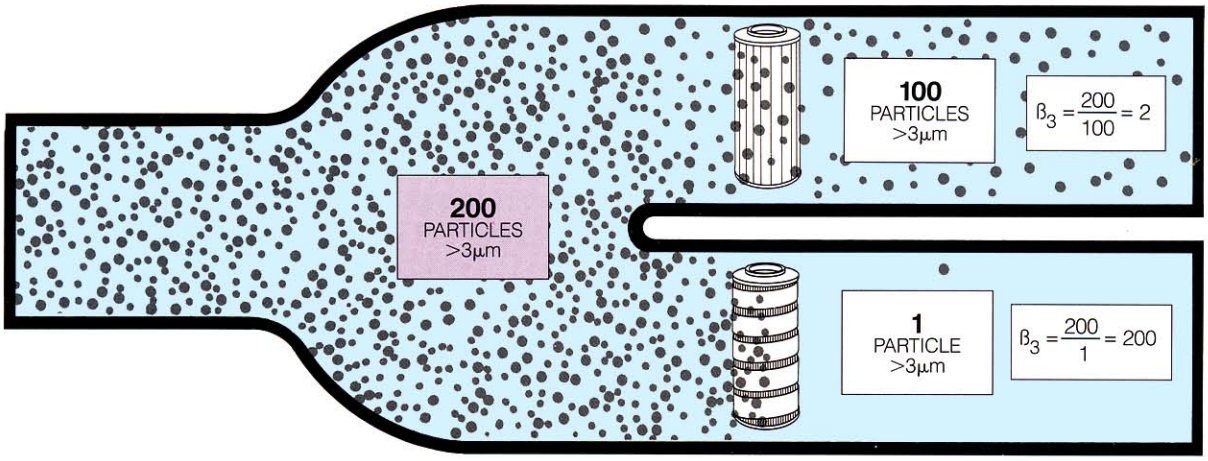

Page from Pall brochure *Contamination Control and FIltration Fundamentals*

Beta Ratio vs. Particle Size

A steep Beta curve profile demonstrates a medium with consistent, stable pore structure and high beta performance across the selected particle range. Flatter curves are indicative of media with inconsistent pore structure and lack of control over the particle range.

To determine filter rating, particles at various micron sizes are counted repeatedly throughout the multi-pass test. Beta ratios are graphed and the particle size, where the plotted data crosses ß = 200, becomes the filter rating.

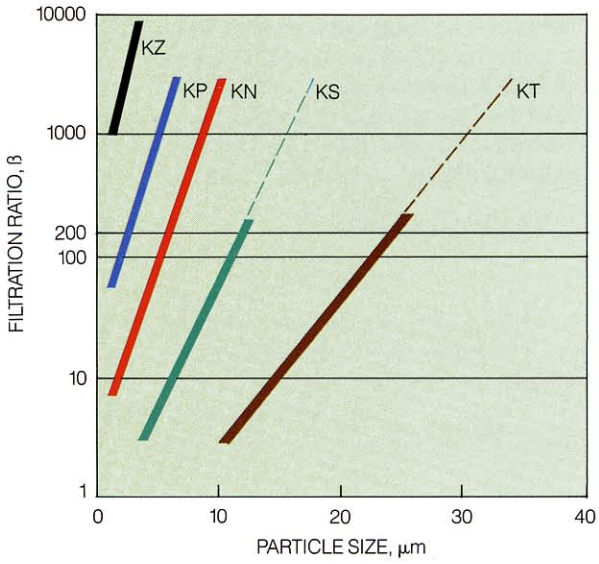

Beta Ratio and Downstream Fluid Quality

Fluid downstream of a $ß_X \geq 200$ (99.5% efficiency) filter is 2.67 times cleaner for particles ≥ x microns than a $ß_X \geq 75$ (98.7% efficiency) filter.

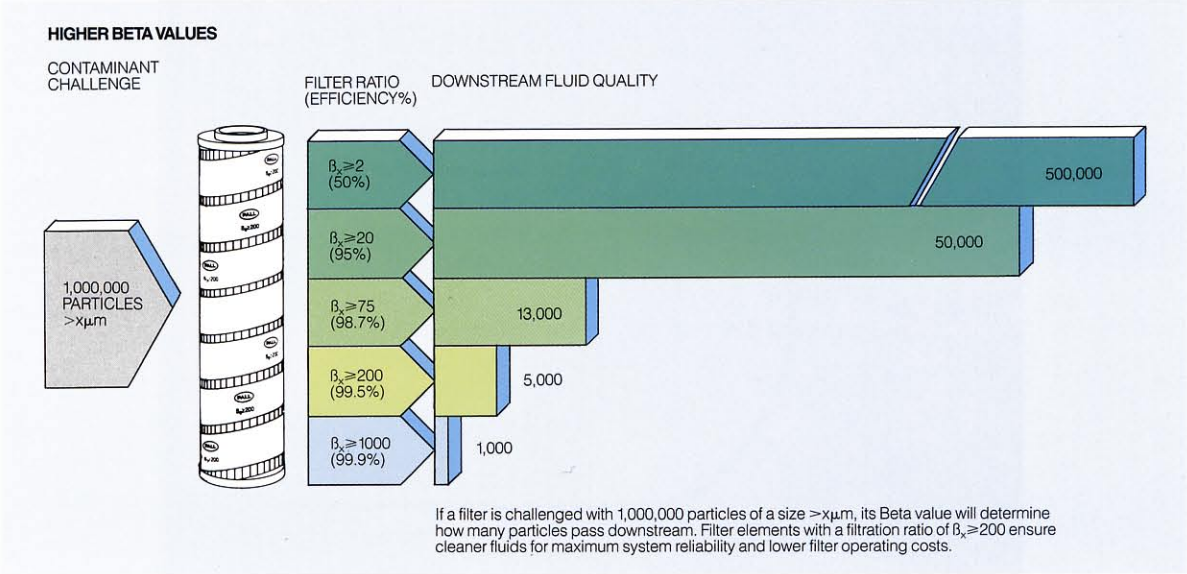

Page from Pall brochure *Contamination Control and FIltration Fundamentals*

Breaking the Chain Reaction of Wear

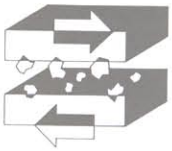

When component clearances are bridged by metallic particles, sand, dirt, and other wear debris, the chain reaction of wear begins. This happens when wear contaminants are left uncontrolled to build up and generate more particles within the system.

High performance filters control harmful abrasive particles for longer component life. The few recirculated abrasive particles are controlled by the filter.

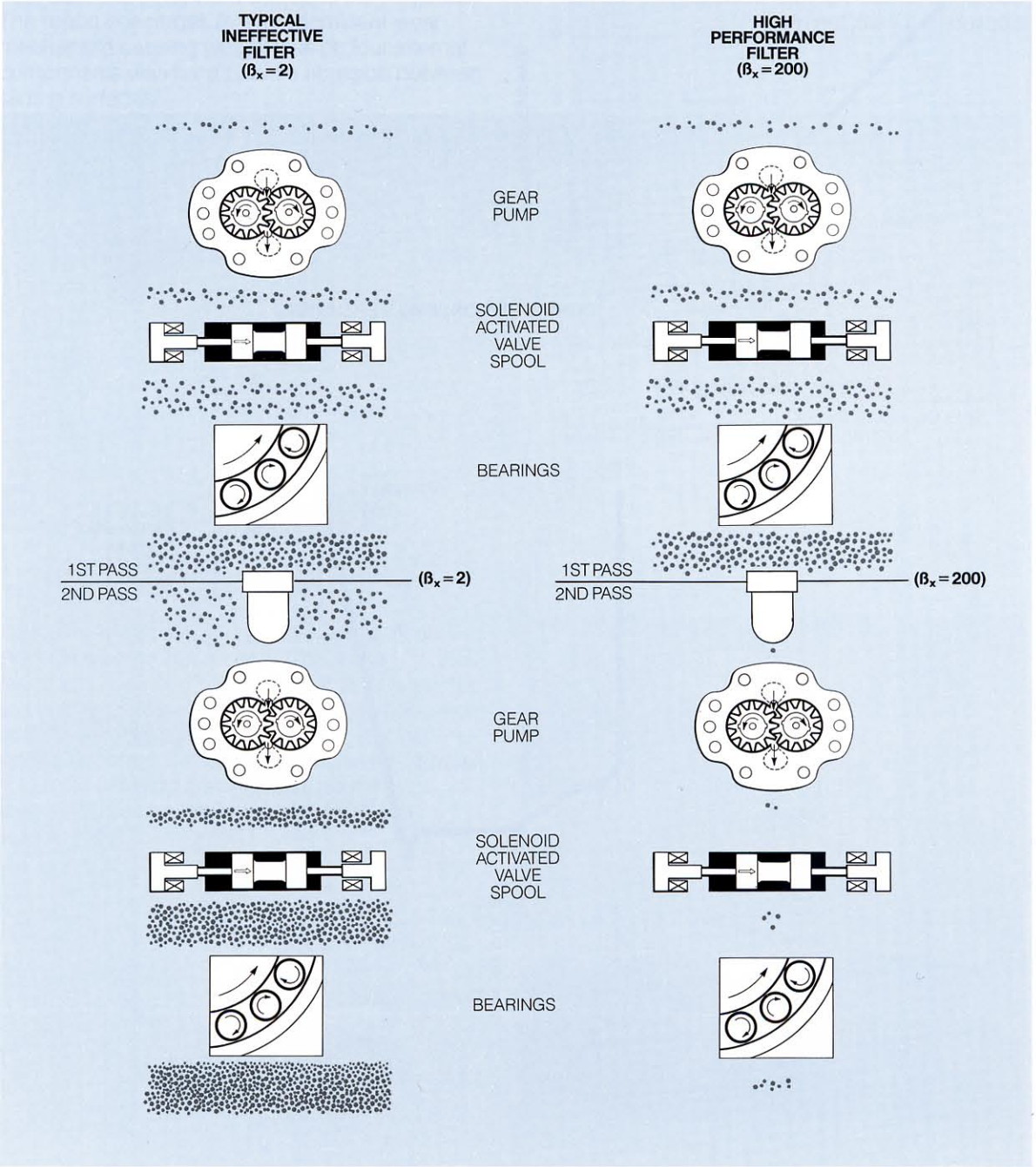

Page from Pall brochure *Contamination Control and FIltration Fundamentals*